304 .375

Work Order ID 74443

Thursday, September 29, 2011 2:43:02 PM

Item ID: D3759-1 **Accept** **Setup Start**

Revision ID:

Item Name: Bushing **Stop**

Start Date: 9/29/2011 **Start Qty:** 80.00 **Cust Item ID:**

Required Date: 10/14/2011 **Req'd Qty:** 80.00 **Customer:**

Reference:

Approvals: **Process Plan:** M.L.J **Date:** 9/29/11 **Tooling:** _____ **Date:** _____ **Run Start**

QC: _____ **Date:** _____ **SPC (Y/N):** _____ **Date:** _____ **Stop**

Draw Nbr	Revision Nbr
D3759	Rev A

Sequence ID/ Work Center ID	Operation Description	Set Up/ Run Hours	Tool ID	Tool #	Plan Code	Accept Qty	Reject Qty	Reject Number	Insp. Stamp
100	Hardinge CNC LATHE SMALL	0.00				80	ϕ		11/10/18
Hardinge	**Memo**	0.00							
Hardinge CNC Lathe Small	Hardinge CNC LATHE SMALL□ Turn per Folio FA727 and Dwg D3759 □ DO NOT Deburr ENDS								
110	QC2- Inspect parts off machine FAI/FAIB	0.00				80	ϕ		11/10/18
QC	**Memo**	0.00							
Quality Control									
120	QC8- Inspect parts - second check	0.00	B.A 11/10/18			80	ϕ		
QC	**Memo**	0.00							
Quality Control									

Dart Aerospace Ltd

W/O:		WORK ORDER CHANGES					
DATE	STEP	PROCEDURE CHANGE	By	Date	Qty	Approval Chief Eng / Prod Mgr	Approval QC Inspector

Part No: _____ **PAR #:** _____ **Fault Category:** _____ **NCR:** Yes No **DQA:** _____ **Date:** _____

Resolution: _____ **Disposition:** _____ **QA: N/C Closed:** _____ **Date:** _____

NCR:		WORK ORDER NON-CONFORMANCE (NCR)						
DATE	STEP	Description of NC Section A	Corrective Action Section B			Verification Section C	Approval Chief Eng	Approval QC Inspector
			Initial Chief Eng	Action Description Chief Eng	Sign & Date			

NOTE: Date & initial all entries

H:\fFORMS\Quality Assurance\approved QA\NCRWO RevE

Work Order ID 74443

Thursday, September 29, 2011 2:43:02 PM

Item ID: D3759-1 **Accept** **Setup Start**

Revision ID: **Stop**

Item Name: Bushing

Start Date: 9/29/2011 **Start Qty:** 80.00 **Cust Item ID:**

Required Date: 10/14/2011 **Req'd Qty:** 80.00 **Customer:**

Reference:

Run Start

Approvals: **Process Plan:** _____ **Date:** _____ **Tooling:** _____ **Date:** _____ **Stop**

QC: _____ **Date:** _____ **SPC (Y/N):** _____ **Date:** _____

Sequence ID/ Work Center ID	Operation Description	Set Up/ Run Hours	Tool ID	Tool #	Plan Code	Accept Qty	Reject Qty	Reject Number	Insp. Stamp
130	Identify as per dwg & Stock Location: WA	0.00							
Packaging						SP	11	-10	-19
Packaging	**Memo**	0.00							
	*****STOCK IN BASKET CELL*****								
140	QC21- Final Inspection - Work Order Release	0.00							
QC							11/10/19		
Quality Control	**Memo**	0.00							

MF 11-10-19

Dart Aerospace Ltd

W/O:		WORK ORDER CHANGES					
DATE	STEP	PROCEDURE CHANGE	By	Date	Qty	Approval Chief Eng / Prod Mgr	Approval QC Inspector

Part No: _____ **PAR #:** _____ **Fault Category:** _____ **NCR:** Yes No **DQA:** _____ **Date:** _____

Resolution: _____ **Disposition:** _____ **QA: N/C Closed:** _____ **Date:** _____

NCR:		WORK ORDER NON-CONFORMANCE (NCR)						
DATE	STEP	Description of NC Section A	Corrective Action Section B			Verification Section C	Approval Chief Eng	Approval QC Inspector
			Initial Chief Eng	Action Description Chief Eng	Sign & Date			

NOTE: Date & initial all entries

H:\fFORMS\Quality Assurance\approved QA\NCRWO RevE

Picklist Print

Thursday, September 29, 2011 2:43:09 PM

Work Order ID: 74443

Parent Item: D3759-1

Parent Item Name: Bushing

Start Date: 9/29/2011 **Required Date:** 10/14/2011

Start Qty: 80.00 **Required Qty:** 80.00

Comments: IPP Rev:A 08-03-04 new issue DD verified by: LL

Component Item ID/ Item Name	Replacement Item ID	Mfg/ Purch	Bin Item	Primary Location	Last Location	Route Seq ID	Unit of Measure	Qty on Hand	Qty per Kit	Total Qty	Qty Issued	Date Issued	Status
M304R0.375 304 ROUND BAR 0.375		Purchased	No			110	f	21.7600	0.0725	6.105263 5.6666'	11/10/18		

Location	Loc Qty	Loc Code
MAT029	21.76	
117130	2.46	
118449	19.3	

5.6666'

Dart Aerospace Ltd

W/O:		WORK ORDER CHANGES					
DATE	STEP	PROCEDURE CHANGE	By	Date	Qty	Approval Chief Eng / Prod Mgr	Approval QC Inspector

Part No: _____ **PAR #:** _____ **Fault Category:** _____ **NCR:** Yes No **DQA:** _____ **Date:** _____

Resolution: _____ **Disposition:** _____ **QA: N/C Closed:** _____ **Date:** _____

NCR:		WORK ORDER NON-CONFORMANCE (NCR)						
DATE	STEP	Description of NC Section A	Corrective Action Section B			Verification Section C	Approval Chief Eng	Approval QC Inspector
			Initial Chief Eng	Action Description Chief Eng	Sign & Date			

NOTE: Date & initial all entries

H:\fFORMS\Quality Assurance\approved QA\NCRWO RevE

DART AEROSPACE LTD	Work Order:	74443
Description: Bushing	Part Number:	D3759-1
Inspection Dwg: D3759 **Rev:** A		Page 1 of 1

FIRST ARTICLE INSPECTION CHECKLIST

[X] First Article [ ] Prototype

Drawing Dimension	Tolerance	Actual Dimension	Accept	Reject	Method of Inspection	Comments
Ø0.375	+0.000/-0.020	Ø0.3656	✓		SL 02	
Ø0.257	+0.005/-0.001	Ø0.257	✓		SL 08	
0.750	+/-0.010	0.751	✓		SL 08	

Measured by:	[illegible]
Date:	11/10/17

Audited by:	D.A
Date:	11/10/18

Prototype Approval:	N/A
Date:	N/A

Rev	Date	Change	Revised by	Approved
A	08.04.21	New Issue	KJ/DD	

Dart Aerospace Ltd

W/O:		WORK ORDER CHANGES					
DATE	STEP	PROCEDURE CHANGE	By	Date	Qty	Approval Chief Eng / Prod Mgr	Approval QC Inspector

Part No: _____ **PAR #:** _____ **Fault Category:** _____ **NCR:** Yes No **DQA:** _____ **Date:** _____

Resolution: _____ **Disposition:** _____ **QA: N/C Closed:** _____ **Date:** _____

NCR:		WORK ORDER NON-CONFORMANCE (NCR)						
DATE	STEP	Description of NC Section A	Corrective Action Section B			Verification Section C	Approval Chief Eng	Approval QC Inspector
			Initial Chief Eng	Action Description Chief Eng	Sign & Date			

NOTE: Date & initial all entries

H:\fFORMS\Quality Assurance\approved QA\NCRWO RevE

SHOP COPY
RETURN TO
ENGINEERING
UNCONTROLLED COPY
SUBJECT TO AMENDMENT
WITHOUT NOTICE
WORK ORDER
NO. 74443
M.L.J
9/29/11

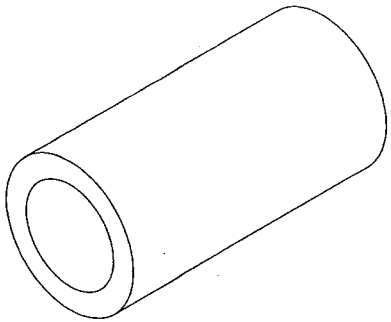

D3759-1 BUSHING

RELEASED

NOTES:
1) MATERIAL: AISI 304/316, STAINLESS STEEL ROD
(REF. DART SPEC M304R)
OR AISI 304/316, STAINLESS STEEL TUBE
(REF. DART SPEC M304TR)
2) FINISH: NONE
3) TOLERANCES: PER DART QSI 018 UNLESS OTHERWISE NOTED
4) UNITS: INCHES UNLESS OTHERWISE NOTED
5) BREAK SHARP EDGES: 0.005 TO 0.010 MAX
6) IDENTIFICATION: N/A
7) WEIGHT: 0.01 lbs

REV.	DESCRIPTION	BY	DATE
A	NEW ISSUE	AJS	08.03.03

DESIGN	AJS	**DART AEROSPACE LTD** HAWKESBURY, ONTARIO, CANADA
DRAWN	AJS	
CHECKED		DRAWING NO. D3759 — REV. A — SHEET 1 OF 2
MFG. APPR.		
APPROVED		TITLE: BUSHING — SCALE: NTS
DE APPR.		
DATE	08.03.03	

COPYRIGHT © 2008 BY DART AEROSPACE LTD
THIS DOCUMENT IS PRIVATE AND CONFIDENTIAL AND IS SUPPLIED ON THE EXPRESS CONDITION THAT IT IS NOT TO BE USED FOR ANY PURPOSE OR COPIED OR COMMUNICATED TO ANY OTHER PERSON WITHOUT WRITTEN PERMISSION FROM DART AEROSPACE LTD.

Dart Aerospace Ltd

W/O:		WORK ORDER CHANGES					
DATE	STEP	PROCEDURE CHANGE	By	Date	Qty	Approval Chief Eng / Prod Mgr	Approval QC Inspector

Part No: _____ **PAR #:** _____ **Fault Category:** _____ **NCR:** Yes No **DQA:** _____ **Date:** _____

Resolution: _____ **Disposition:** _____ **QA: N/C Closed:** _____ **Date:** _____

NCR:		WORK ORDER NON-CONFORMANCE (NCR)						
DATE	STEP	Description of NC Section A	Corrective Action Section B			Verification Section C	Approval Chief Eng	Approval QC Inspector
			Initial Chief Eng	Action Description Chief Eng	Sign & Date			

NOTE: Date & initial all entries

H:\fFORMS\Quality Assurance\approved QA\NCRWO RevE

74443

D3759-1 BUSHING

RELEA
08.03.11

DESIGN	AJS	**DART AEROSPACE LTD** HAWKESBURY, ONTARIO, CANADA
DRAWN	AJS	
CHECKED		DRAWING NO. D3759 — REV. A — SHEET 2 OF 2
MFG. APPR.		
APPROVED		TITLE BUSHING — SCALE NTS
DE APPR.		
DATE	08.03.03	

COPYRIGHT © 2008 BY DART AEROSPACE LTD
THIS DOCUMENT IS PRIVATE AND CONFIDENTIAL AND IS SUPPLIED ON THE EXPRESS CONDITION THAT IT IS NOT TO BE USED FOR ANY PURPOSE OR COPIED OR COMMUNICATED TO ANY OTHER PERSON WITHOUT WRITTEN PERMISSION FROM DART AEROSPACE LTD

Dart Aerospace Ltd

W/O:		WORK ORDER CHANGES					
DATE	STEP	PROCEDURE CHANGE	By	Date	Qty	Approval Chief Eng / Prod Mgr	Approval QC Inspector

Part No: _____ **PAR #:** _____ **Fault Category:** _____ **NCR:** Yes No **DQA:** _____ **Date:** _____

Resolution: _____ **Disposition:** _____ **QA: N/C Closed:** _____ **Date:** _____

NCR:		WORK ORDER NON-CONFORMANCE (NCR)						
DATE	STEP	Description of NC Section A	Corrective Action Section B			Verification Section C	Approval Chief Eng	Approval QC Inspector
			Initial Chief Eng	Action Description Chief Eng	Sign & Date			

NOTE: Date & initial all entries

H:\FORMS\Quality Assurance\approved QA\NCRWO RevE